TYPICAL ROOM LAYOUT

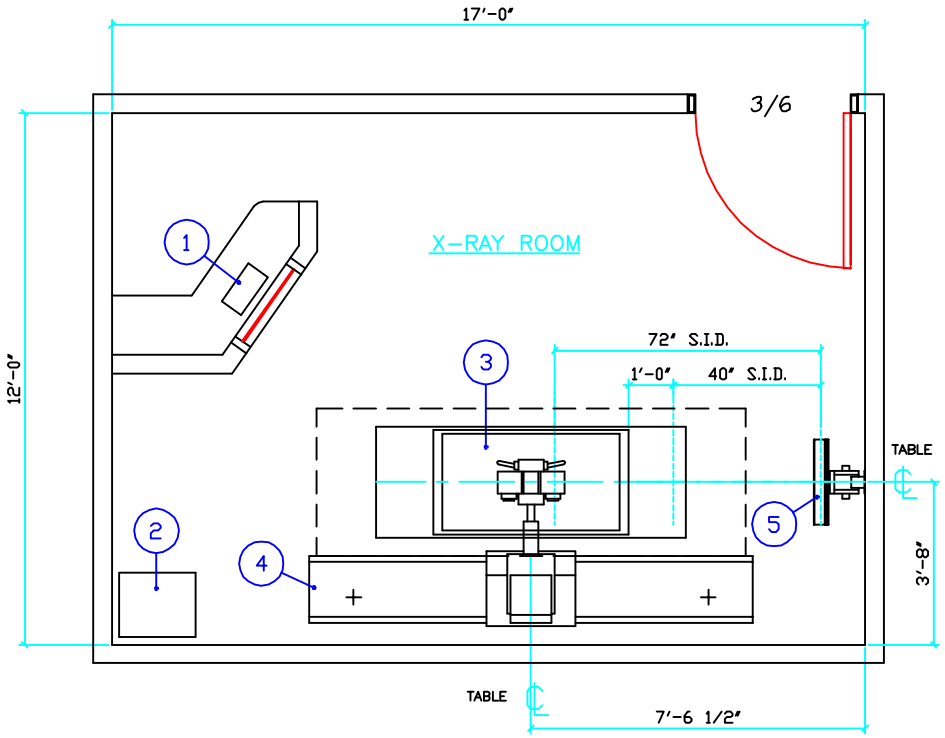

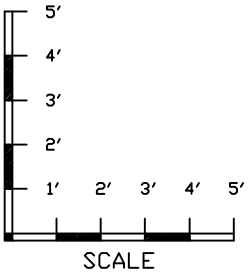

GENERAL NOTES

- ALL SPECIFICATIONS AND SPACE REQUIREMENTS ARE SHOWN GENERICALLY. CONTACT GAMMA TECHNOLOGIES FOR SPECIFIC REQUIREMENTS PERTAINING TO OPTIONAL EQUIPMENT COMPONENTS AND ADDITIONAL ROOM PREPARATION SPECIFICATIONS.
- RECOMMENDED CEILING HEIGHT IS 8'-6".
- SUGGESTED AMBIENT ROOM REQUIREMENTS ARE 66° TO 75° F. AT 30% TO 60% R.M. (NON-CONDENSING).
- MAIN INCOMING POWER SUPPLY: VARIES WITH GENERATOR MODEL.

SUMMIT HIGH FREQUENCY
RADIOGRAPHIC SYSTEM SUITE

EQUIPMENT SCHEDULE

EQUIPMENT IDENTIFICATION NUMBER

	BTU / HOUR	DESCRIPTION	WEIGHT (LBS.)	DIMENSIONS (IN.) W	x D	x H	
1	25	SUMMIT SYNERGY 20KHZ GENERATOR OPERATOR CONTROL PANEL		12.50	6.50	1.50	4
2	544	SUMMIT SYNERGY 20KHZ GENERATOR POWER MUDULE		20.70	17.50	37.30	200
3	35	SUMMIT MODEL S-210 FOUR WAY FLOAT TOP TABLE		84.00	30.00	31.50	550
4	1200	SUMMIT FM FLOOR MOUNTED TUBESTAND		120.00	44.00	89.00	482
5	35	SUMMIT MODEL S-109 VERTICAL BUCKY STAND		24.00	14.00	86.00	183
6							
7							
8							

GAMMA TECH, INC
129 Wild Berry Lane
Hampstead, NC 28443
Ph (910) 270-9787
Fax (910) 270-9767
www.gammatech.net

© PLANNING DIV.

FILE NAME:
SYN20_FM_210

REVISION DATE:
09.01.2011